102 PARTS BREAKDOWN

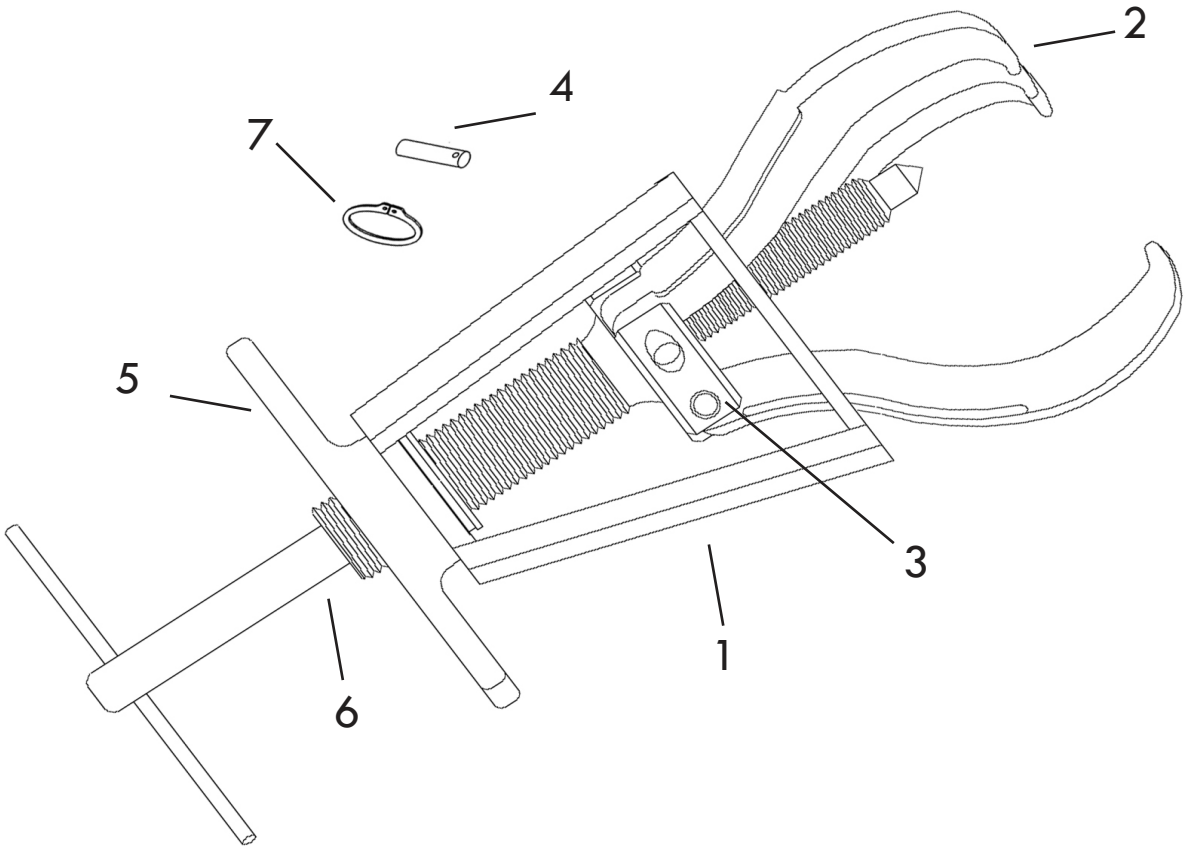

All Posi Lock Pullers are parts replaceable.
See part numbers below.

Description	Part #
1. Cage® - 3 Jaw	10253
2. Jaw	10254
3. Jaw Head Assembly - 3 Jaw	10255
4. Pin	10256
5. T-Handle	10257
6. Center Bolt (dia. 5/16")	10258
7. Snap Ring	10259

Safety. Speed. Strength. Safety. Speed. Strength. Safety. Speed. Strength. Safety. Speed. Strength. Safety.