103 PARTS BREAKDOWN

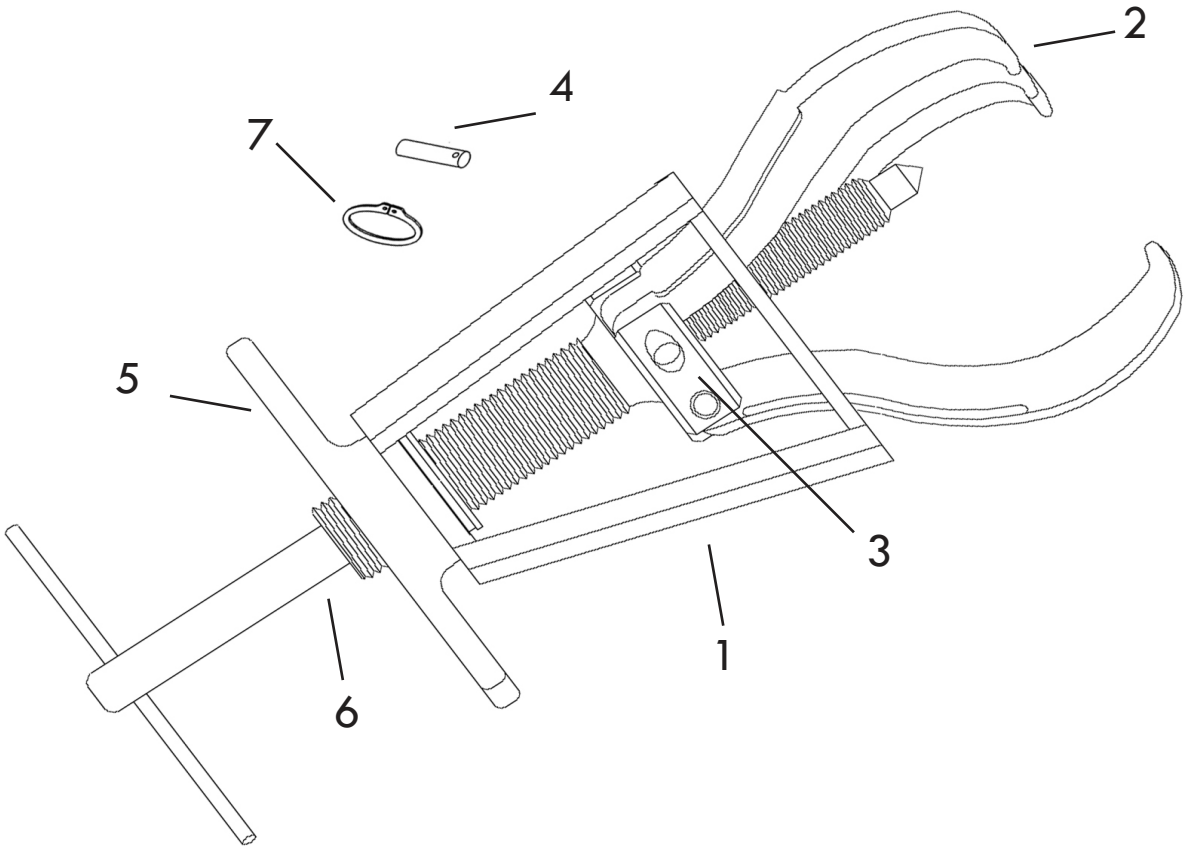

All Posi Lock Pullers are parts replaceable.
See part numbers below.

Description	Part #
1. Cage® - 3 Jaw	10353
2. Jaw	10354
3. Jaw Head Assembly - 3 Jaw	10355
4. Pin	10356
5. T-Handle	10357
6. Center Bolt (dia. 3/8")	10358
7. Snap Ring	10359

Safety. Speed. Strength. Safety. Speed. Strength. Safety. Speed. Strength. Safety. Speed. Strength. Safety.