106 PARTS BREAKDOWN

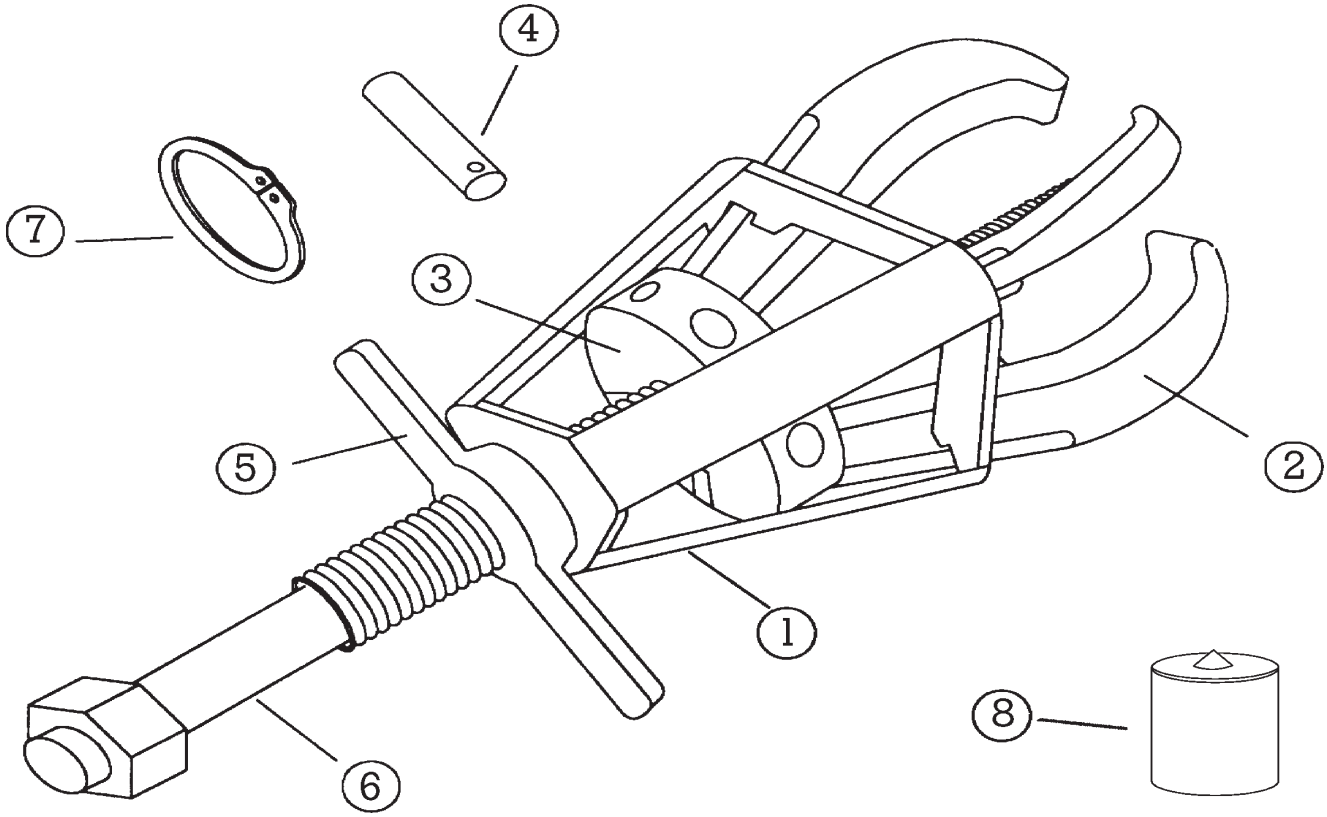

All Posi Lock Pullers are parts replaceable.
See part numbers below.

Description	Part #
1. Cage® - 3 Jaw	10653
2. Jaw	10654
3. Jaw Head Assembly - 3 Jaw	10655
4. Pin	10656
5. T-Handle	10657
6. Center Bolt (Dia. 5/8")	10658
7. Snap Ring	10659
8. Tip Protector	P6
***Optional accessories are also available**	

Safety. Speed. Strength. Safety. Speed. Strength. Safety. Speed. Strength. Safety. Speed. Strength. Safety.