THE CAGE IS THE KEY

POSI LOCK® PULLER, INC.

Safety. Speed. Strength. Safety. Speed. Strength. Safety. Speed. Strength. Safety.

108XL PARTS BREAKDOWN

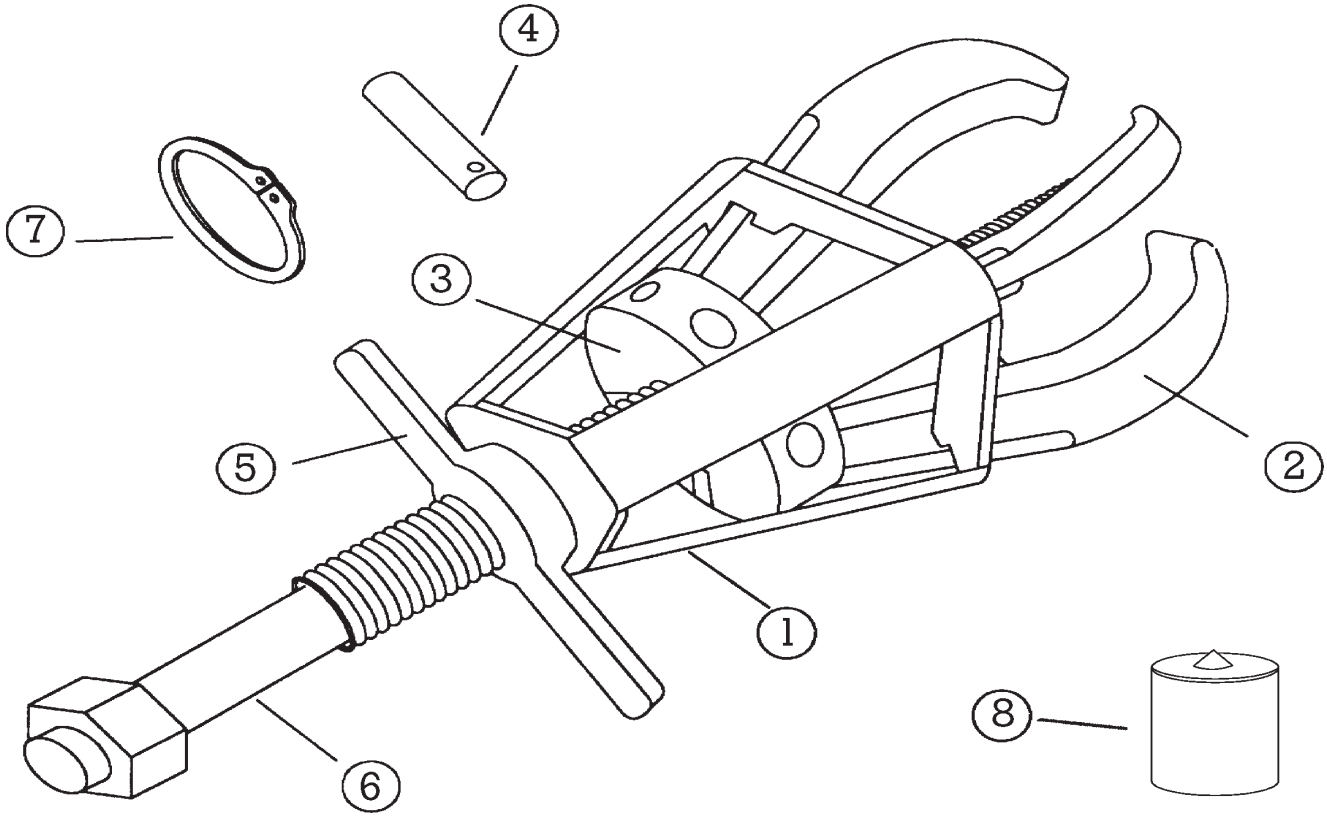

All Posi Lock Pullers are parts replaceable.
See part numbers below.

Description	Part #
1. Cage® - 3 Jaw	10853
2. Jaw	11054L
3. Jaw Head Assembly - 3 Jaw	10855
4. Pin	11056
5. T-Handle	11057
6. Center Bolt (Dia. 5/8")	10858
7. Snap Ring	11059
8. Tip Protector	P10
***Optional accessories are also available**	