THE CAGE IS THE KEY

POSI LOCK® PULLER, INC.

Safety. Speed. Strength. Safety. Speed. Strength. Safety. Speed. Strength. Safety.

113L PARTS BREAKDOWN

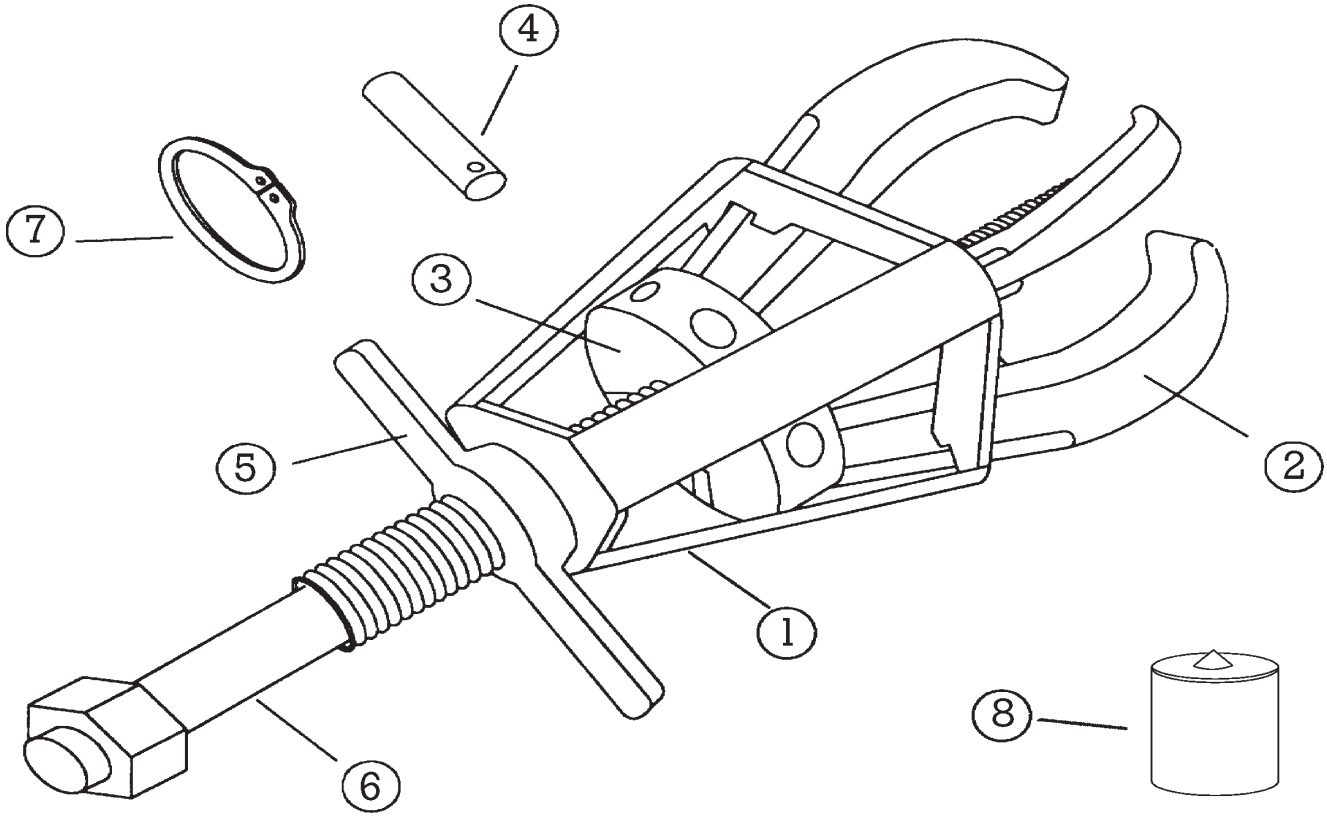

All Posi Lock Pullers are parts replaceable.
See part numbers below.

Description	Part #
1. Cage® - 3 Jaw	11353
2. Jaw	11354L
3. Jaw Head Assembly - 3 Jaw	11355
4. Pin	11356
5. T-Handle	11357
6. Center Bolt (Dia. 1 1/8")	11358
7. Snap Ring	11359
8. Tip Protector	P13/16
*Optional accessories are also available	