THE CAGE IS THE KEY

POSI LOCK PULLER, INC.

Safety. Speed. Strength. Safety. Speed. Strength. Safety. Speed. Strength. Safety.

202 PARTS BREAKDOWN

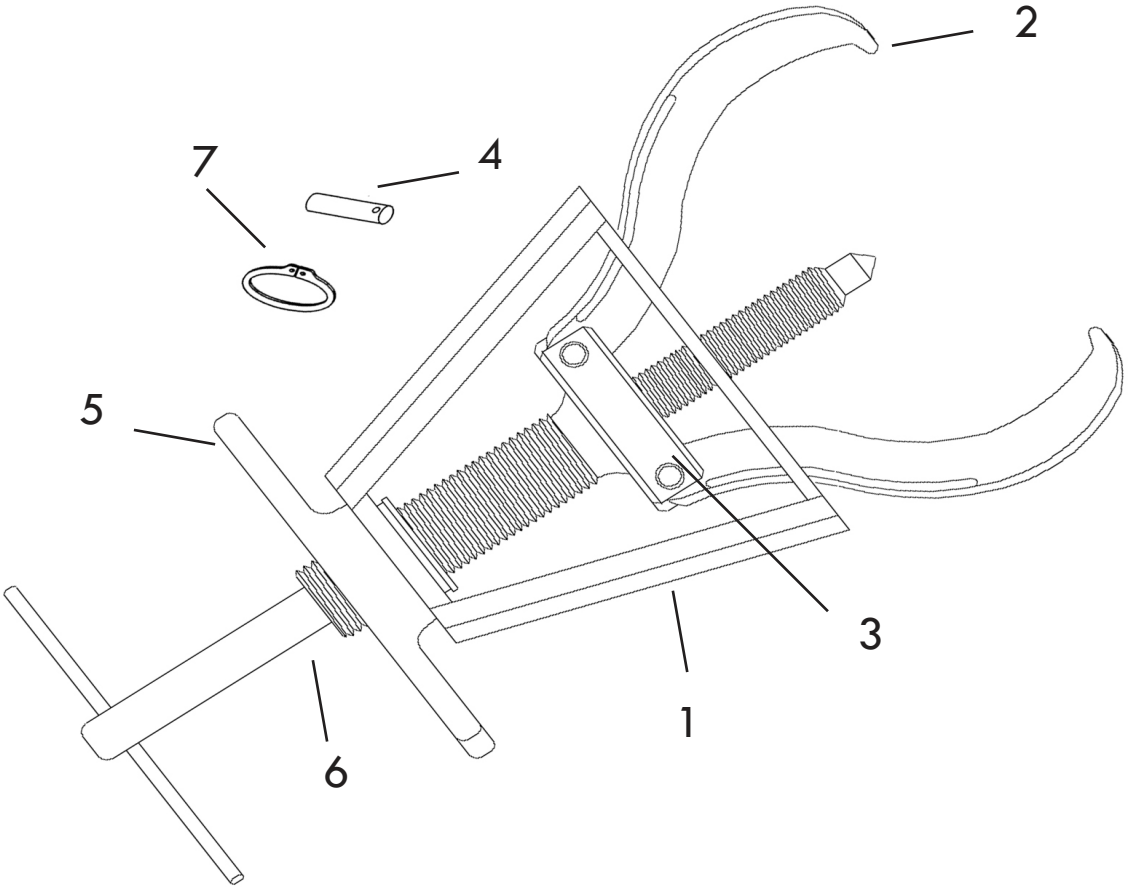

All Posi Lock Pullers are parts replaceable.
See part numbers below.

Description	Part #
1. Cage® - 2 Jaw	20253
2. Jaw	10254
3. Jaw Head Assembly - 2 Jaw	20255
4. Pin	10256
5. T-Handle	10257
6. Center Bolt (dia. 5/16")	10258
7. Snap Ring	10259