THE CAGE IS THE KEY

POSI LOCK® PULLER, INC.

Safety. Speed. Strength. Safety. Speed. Strength. Safety. Speed. Strength. Safety.

210L PARTS BREAKDOWN

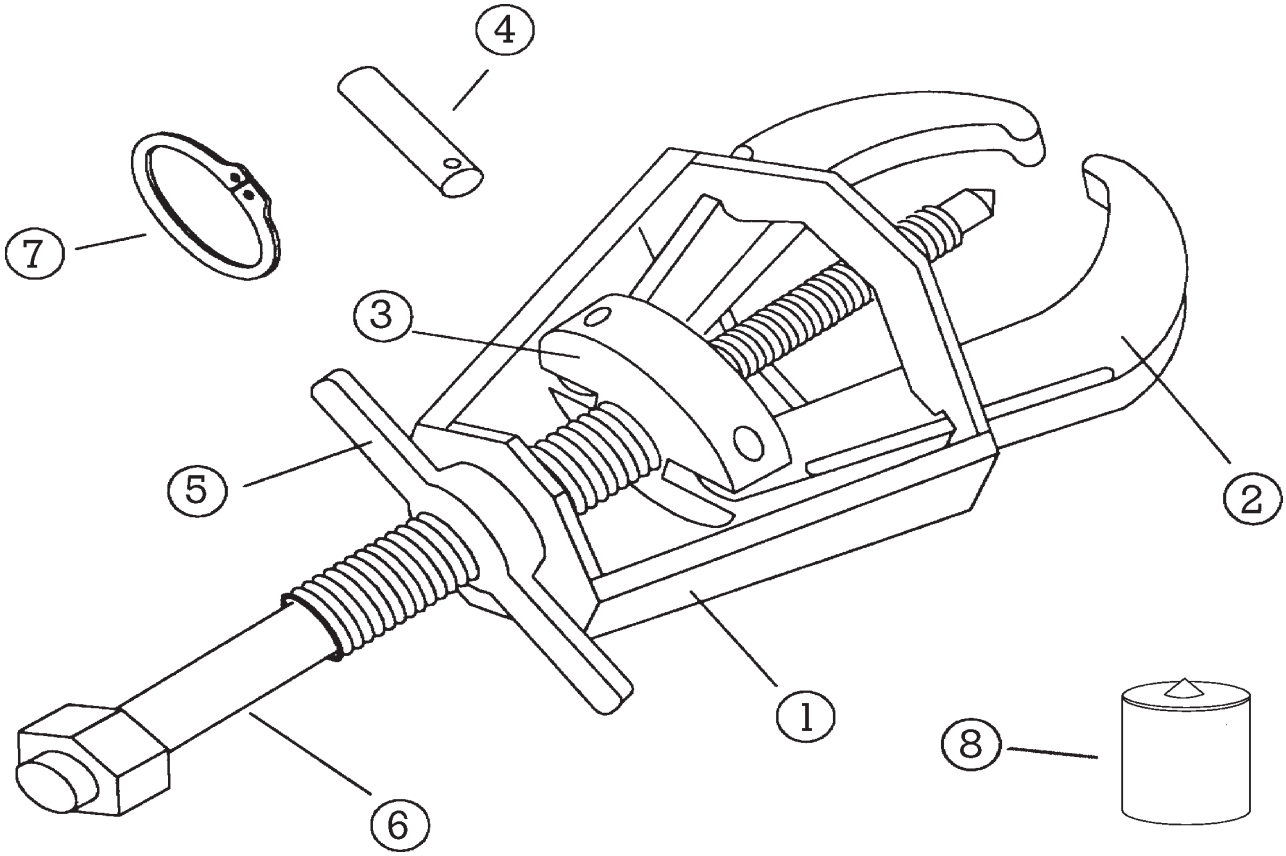

All Posi Lock Pullers are parts replaceable.
See part numbers below.

Description	Part #
1. Cage® - 2 Jaw	21053
2. Jaw	11054L
3. Jaw Head Assembly - 2 Jaw	21055
4. Pin	11056
5. T-Handle	11057
6. Center Bolt (Dia. 3/4")	11058
7. Snap Ring	11059
8. Tip Protector	P10
***Optional accessories are also available**	