THE CAGE IS THE KEY

POSI LOCK PULLER, INC.

TB1045 PARTS BREAKDOWN

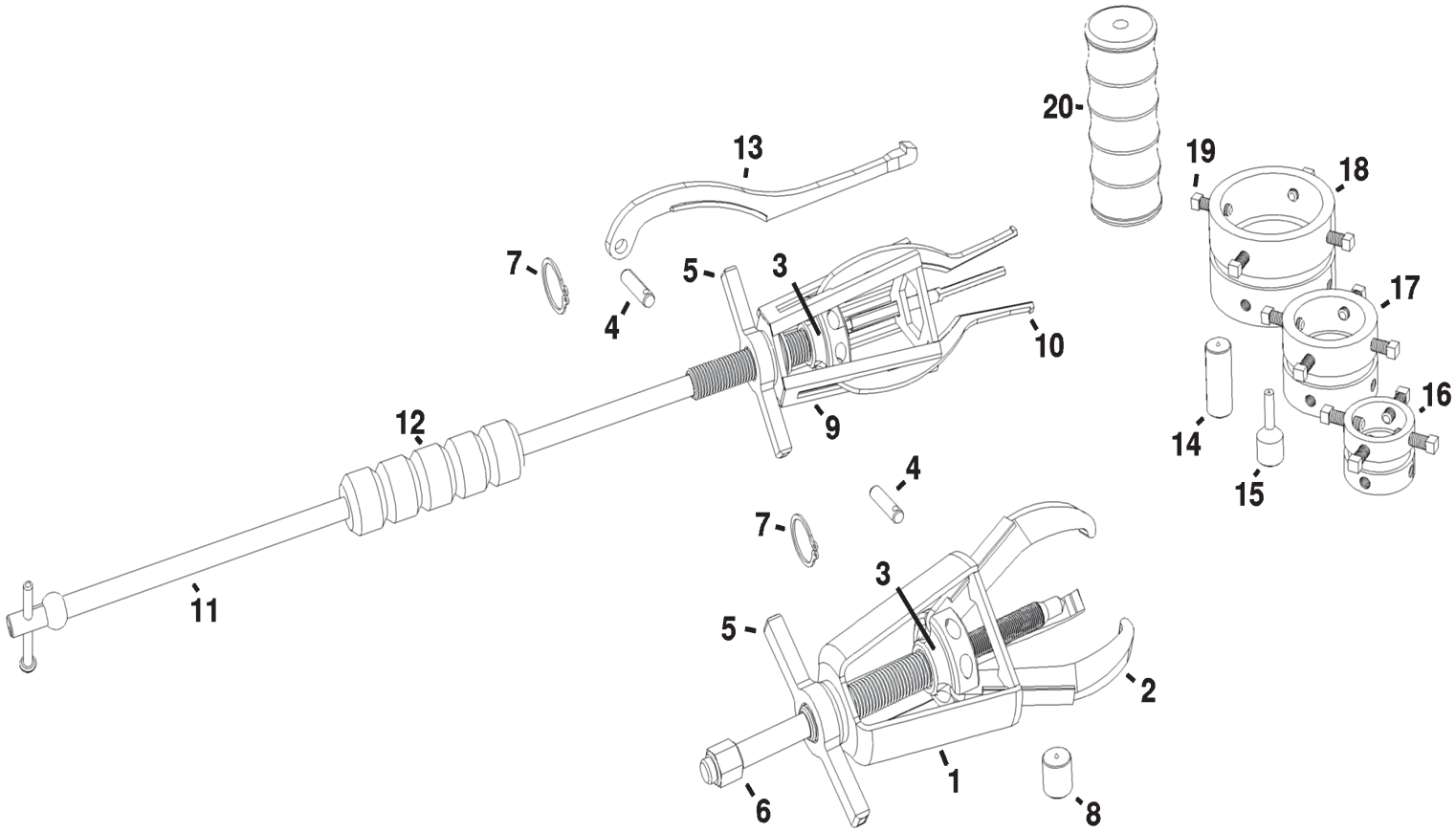

All Posi Lock Pullers are parts replaceable. See part numbers below.

Description	Part #
1. External Cage® - 3 Jaw	10453
2. External Jaw	10454
3. Jaw Head Assembly - 3 Jaw	10455
4. Pin	10456
5. T-Handle	10457
6. Center Bolt (Dia. 9/16")	10458
7. Snap Ring	10459
8. Tip Protector	P4
9. Internal Cage® - 3 Jaw	10553
10. Internal Jaw	10554

Description	Part #
11. Slide Rod	10561
12. Slide Hammer (2.5lb)	10562
13. Long Jaw	10554L
14. Bolt Extender	X4
15. Tip Reducer/Extender	HP-70
16. Small Hub Puller	HP-30
17. Large Hub Puller	HP-40
18. Extra large Hub Puller	HP-50
19. Square Head Set Screw	HP-60
20. Slide Hammer (5lb)	10563

Safety. Speed. Strength. Safety. Speed. Strength. Safety. Speed. Strength. Safety. Speed. Strength. Safety.